Control Valve Type BKLK with gearbox, DIN 24154 line 4

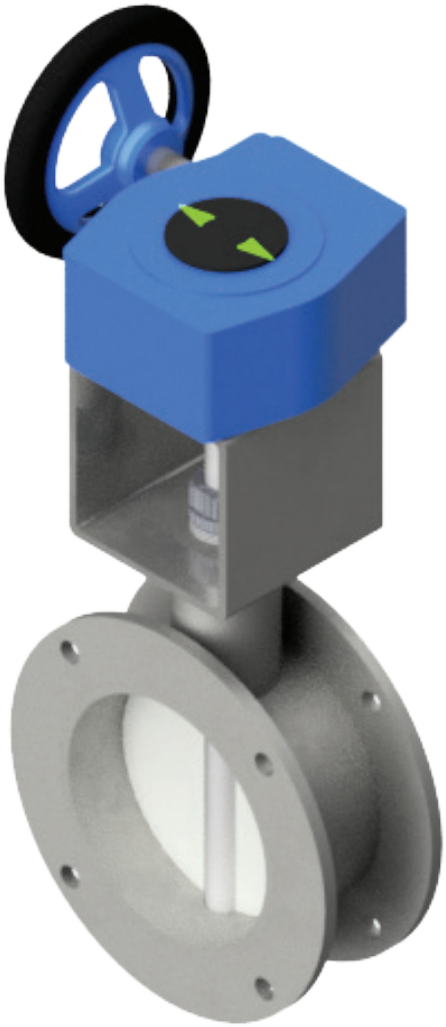

Range of application
Shut-off and control of gaseous and liquid media as well as bulk solids of all kinds for plant engineering, chemical-, pharmaceutical- and food industry and ventilation systems.

Product specification
A special feature of these butterfly valves is a shaft with low torque which is centrally positioned on bearings.

- Flange connection according to DIN 24154 series 2 and 4, other flange connections upon request
- Length according to BK factory standard or upon customer‘s request
- Temperature up to 1100° C

Parts	Factory Standard	Options
Body	St. 1.0570	Alu, GG, Stainless steel
Flap	St. 1.0038	Stainless steel,Hastelloy
Shaft	St. 50 K	Stainless steel, Hastelloy
Sealing	none	

BK - Armaturen · Buchenhofener Str. 21 · 42329 Wuppertal · Fon: 0202-7388313 · Fax: 0202-7388315
www.bk-armaturen.de · info@bk-armaturen.de

Control Valve Type BKLK with gearbox, DIN 24154 line 4

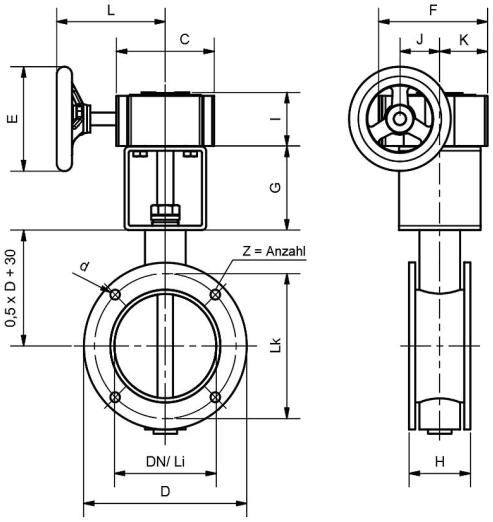

DN	Gr.	C	D	d2	E	F	G	H	I	J	K	L	Li	Lk	Z
71	1	96	125	9,5	125	107	80	60	55	39	46	97	65	110	4
80	1	96	135	9,5	125	107	80	60	55	39	46	97	75	118	4
90	1	96	145	9,5	125	107	80	60	55	39	46	97	85	128	4
100	1	96	155	9,5	125	107	80	60	55	39	46	97	95	139	4
112	1	96	165	9,5	125	107	80	60	55	39	46	97	105	151	4
125	1	96	180	9,5	125	107	80	60	55	39	46	97	120	165	4
140	1	96	205	11,5	125	107	80	60	55	39	46	97	135	182	8
160	1	96	225	11,5	125	107	80	60	55	39	46	97	155	200	8
180	1	96	240	11,5	125	107	80	60	55	39	46	97	175	219	8
200	1	96	265	11,5	125	107	80	60	55	39	46	97	195	241	8
224	1	96	280	11,5	125	107	80	60	55	39	46	97	220	265	8
250	1	96	315	11,5	125	107	100	60	55	39	46	97	245	292	8
280	1	96	355	11,5	125	107	100	60	55	39	46	97	275	332	8
315	1	96	390	11,5	125	107	100	65	55	39	46	97	310	366	8
355	1	96	430	11,5	125	107	100	65	55	39	46	97	350	405	8
400	1	96	475	11,5	125	107	100	65	55	39	46	97	395	448	12
450	2	122	525	11,5	200	132	100	65	60	47	56	127	445	497	12
500	2	122	575	11,5	200	132	100	65	60	47	56	127	495	551	12
560	2	122	655	14	200	132	100	100	60	47	56	127	555	629	16
630	2	122	725	14	200	132	120	100	60	47	56	127	625	698	16
710	2	122	805	14	200	132	120	100	60	47	56	127	705	775	16
800	2	122	890	14	200	132	120	100	60	47	56	127	790	861	24
900	2	122	995	14	200	132	120	100	60	47	56	127	885	958	24
1000	2	122	1095	14	200	132	120	100	60	47	56	127	995	1067	24
1120	3	137	1235	18	200	150	120	140	60	60	62	152	1115	1200	32
1250	3	137	1365	18	200	150	120	140	60	60	62	152	1255	1337	32
1400	3	137	1515	18	200	150	140	140	60	60	62	152	1410	1491	32
1600	3	137	1700	18	200	150	140	140	60	60	62	152	1580	1663	40
1800	3	137	1895	18	200	150	140	140	60	60	62	152	1775	1856	40
2000	3	137	2115	18	200	150	140	140	60	60	62	152	1990	2073	40

BK - Armaturen · Buchenhofener Str. 21 · 42329 Wuppertal · Fon: 0202-7388313 · Fax: 0202-7388315
www.bk-armaturen.de · info@bk-armaturen.de